Engineering Research Project

Student Name: K.P.G.H.D.Dissanayake

Index No: 21UG0618

Introduction

This project outlines the steps to create a simple yet effective LED blinking circuit using a PIC16F887 microcontroller. LED blinking is a fundamental project that introduces beginners to the world of microcontrollers and embedded systems. In this project, we will guide you through the necessary components, circuit connections, and code programming to make an LED bulb blink at a predefined rate.

Components

- PIC16F887 microcontroller
- LED bulb
- 220-ohm resistor
- Breadboard
- Capacitors
- Jumper wires
- 5V power supply

Circuit Connections

Place the PIC16F887 microcontroller on the breadboard. Connect the cathode (shorter lead) of the LED to a GND (Ground) pin on the PIC16F887.Connect the anode (longer lead) of the LED to one end of the 220-ohm resistor. Connect the other end of the resistor to one of the digital output pins (e.g., RB0) on the PIC16F887.Connect the GND (Ground) pin of the PIC16F887 to the negative terminal of the 5V power supply. Connect the VDD pin (power) of the PIC16F887 to the positive terminal of the 5V power supply.

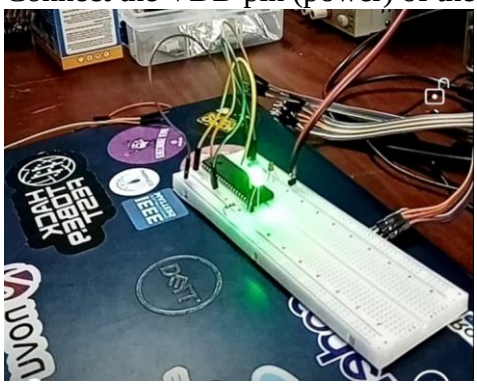

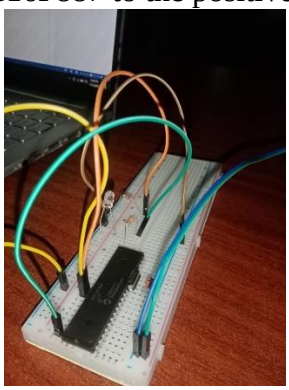

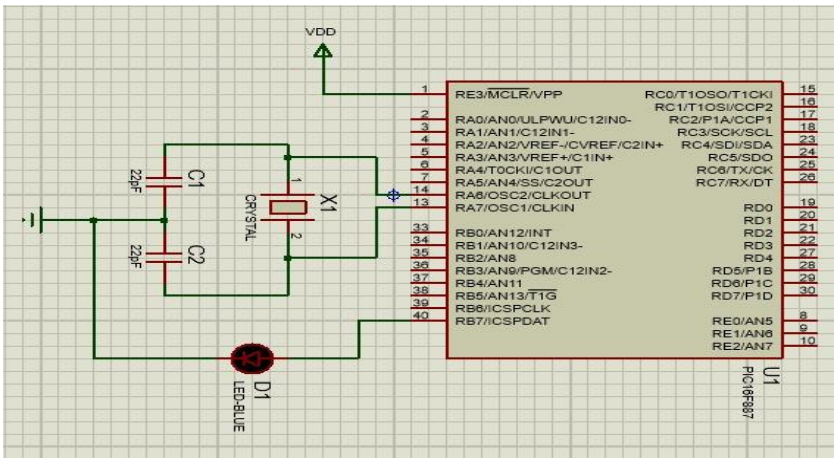

Code Programming

Write a simple program in a suitable programming language, such as C, to control the LED blinking. The following is a basic code snippet in C using the MPLAB X IDE and XC8 compiler for PIC microcontrollers:

```c
#pragma config FOSC = HS        // Oscillator Selection bits (HS oscillator)
#pragma config WDTE = OFF       // Watchdog Timer Enable bit (WDT disabled)
#pragma config PWRTE = OFF      // Power-up Timer Enable bit (PWRT disabled)
#pragma config BOREN = ON       // Brown-out Reset Enable bit (BOR enabled)
#pragma config LVP = ON        // Low-Voltage (Single-Supply) In-Circuit Serial Programming Enable bit (RB3 is digital I
#pragma config CPD = OFF        // Data EEPROM Memory Code Protection bit (Data EEPROM code protection off)
#pragma config WRT = OFF        // Flash Program Memory Write Enable bits (Write protection off; all program memory may
#pragma config CP = OFF         // Flash Program Memory Code Protection bit (Code protection off)


#include <xc.h>

#define _XTAL_FREQ 8000000 //Specify the XTAL crystall FREQ
void main() //The main function
{
TRISB=0X00; //Instruct the MCU that the PORTB pins are used as Output.
PORTB=0X00; //Make all output of RB3 LOW;
while(1) //Get into the Infinie While loop
{
 RB7=1; //LED ON
 __delay_ms(2000); //Wait
 RB7=0; //LED OFF
 __delay_ms(2000); //Wait
}
}// PIC16F684 Configuration Bit Settings
```

Compile and program the code onto the PIC16F887 microcontroller using an appropriate programmer. Once programmed, the microcontroller will control the LED to blink with a 1-second on and 1-second off cycle.

Conclusion

Blinking an LED bulb using a PIC16F887 microcontroller is a great starting point for those looking to learn about microcontroller programming and basic electronic circuits. This project can be expanded upon to create more complex applications and is an essential building block for various embedded systems projects. Have fun experimenting and exploring the world of microcontrollers.